PROCEEDINGS

53. IWK

Internationales Wissenschaftliches Kolloquium
International Scientific Colloquium

Faculty of
Mechanical Engineering

PROSPECTS IN MECHANICAL ENGINEERING

8 - 12 September 2008

www.tu-ilmenau.de

TECHNISCHE UNIVERSITÄT
ILMENAU

Published by
Impressum

Publisher Herausgeber	Der Rektor der Technischen Universität Ilmenau Univ.-Prof. Dr. rer. nat. habil. Dr. h. c. Prof. h. c. Peter Scharff
Editor Redaktion	Referat Marketing und Studentische Angelegenheiten Andrea Schneider
	Fakultät für Maschinenbau Univ.-Prof. Dr.-Ing. habil. Peter Kurz, Univ.-Prof. Dr.-Ing. habil. Rainer Grünwald, Univ.-Prof. Dr.-Ing. habil. Prof. h. c. Dr. h. c. mult. Gerd Jäger, Dr.-Ing Beate Schlütter, Dipl.-Ing. Silke Stauche
Editorial Deadline Redaktionsschluss	17. August 2008
Publishing House Verlag	Verlag ISLE, Betriebsstätte des ISLE e.V. Werner-von-Siemens-Str. 16, 98693 Ilmenau

CD-ROM-Version:

Implementation Realisierung	Technische Universität Ilmenau Christian Weigel, Helge Drumm
Production Herstellung	CDA Datenträger Albrechts GmbH, 98529 Suhl/Albrechts

ISBN: 978-3-938843-40-6 (CD-ROM-Version)

Online-Version:

Implementation Realisierung	Universitätsbibliothek Ilmenau ilmedia Postfach 10 05 65 98684 Ilmenau

Home / Index:
http://www.db-thueringen.de/servlets/DocumentServlet?id=17534

J. Awrejcewicz / P. Olejnik

Simple control of a 2-dof mechanical system with an approximated frictional discontinuity and stochastic kinematic excitation

1. Introduction

Among many dynamical loadings that can affect various building constructions these seismic ones belong to the most crucial being observed in the ground after any earthquakes propagation [4,5].

The forces acting on a construction are formally a result of inertial responses that have been uncovered during the kinematic motion of the construction's foundation. Most simply, a seismic excitation can be realized by means of the deterministic function $f\cos(\omega t)\exp(-0.5\lambda t)$ in which f determines the intensity of earthquakes, ω is the frequency of excitation, and the λ parameter responses for the rate of the excitation damping.

One can exhibit a very exact form of earthquakes with the use of a random process. One of the most popularized models is the stationary stochastic process [7,11] that is characterized by a wide spectrum given by the formula

$$S(\omega)=\frac{1+4\xi_g^2\left(\dfrac{\omega}{\omega_g}\right)^2}{\left[1-\left(\dfrac{\omega}{\omega_g}\right)^2\right]+4\xi_g^2\left(\dfrac{\omega}{\omega_g}\right)^2}S_0, \tag{1}$$

where ξ_g and ω_g are the site dominant damping coefficients and frequency, ω states the frequency of excitation, and S_0 is the constant power spectral intensity of excitation. In practice, these parameters need to be estimated from the local earthquake records on site geological properties. The relation seen in Eq. (1) is called the Kanai-Tajimi power spectral density function and might be interpreted as the corresponding to an ideal white noise excitation that is filtered at the bedrock level through the overlaying soil deposits at a site. A modified version of the above has been presented in [12]:

$$S(\omega) = \frac{\omega_g + 4\xi_g^2\omega_g^2\omega^2}{\left(\omega_g^2 - \omega^2\right)^2 + 4\xi_g^2\omega_g^2\omega^2\left(\omega_1^2 - \omega^2\right)^2 + 4\xi_1^2\omega_1^2\omega^2} S_0, \tag{2}$$

with assumption that ω_1=1.636 and ξ_1=0.619.

The problem of seismic engineering devoted to the building-ground dynamics has been explained by [10] and [13]. A point of useful considerations done under reduction of the influence of loading on a building structure was presented in [6]. There has been estimated a control law allowing for minimization of the construction's amplitude vibration.

The equation in a matrix form of a *n*-th degrees-of-freedom of which motion is caused by any foundation's vibration with frequency $\omega(t)$ becomes the general representation:

$$M\ddot{q} + C\dot{q} + Kq = -M\ddot{\omega}(t) + Bu(t), \tag{3}$$

where: q – vector of the system's relative displacements to a stationary reference system; M, C, K – mass, damping and stiffness matrices of construction, respectively; B – a matrix determining the point of control force attachment in the inner space of building.

2. St-Venant element as the source of nonlinearity

Friction is not a newborn in the theory of earthquakes' investigations and their control. The St-Venant element is one of the attempts of the approximate simulation of damping effects observed in ground structure materials and building structures. This element brings a nonlinearity into the work regime [9]. Figure 1 shows a simple system with 1-dof and the St-Venant damping realization, but the model can be successfully extended to 4-dof parallel coupled oscillators.

2.1 The nonlinear parallel spring connection

Let us assume a mass point *m subjected* to an external force *F* and even in parallel connected to a spring of stiffness *k* and a St-Venant nonlinear element characterized by the coefficient $\alpha(N)$ – the maximal friction force, *x* is the mass displacement.

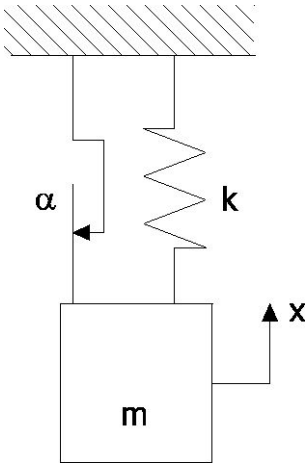

Fig. 1. The 1-dof system with one SV-element.

One writes the following inclusion

$$m\ddot{x} + kx + \alpha\sigma(\dot{x}) \ni F, \tag{4}$$

with $x(0) = x_0, \dot{x}(0) = \dot{x}_0$.

Function σ is defined as below

$$\sigma(\dot{x}) = \begin{cases} -1 & \dot{x} < 0, \\ 1 & \dot{x} > 0, \\ [-1;1] & \dot{x} = 0. \end{cases} \tag{5}$$

Multiplication $\alpha\sigma(\dot{x})$ denotes the friction force propagated in the St-Venant element of which α states its boundary (limit) force. Some physical properties of the element allow to find out that for a relative velocity of motion $\dot{x} = 0$ the dry friction keeps within a limits the motion of point mass *m* maintaining the sate of zero slip velocity. Friction force takes in this time some values from the interval $(-\alpha;\alpha)$. After crossing the boundary values of this interval the point mass *m* begins sliding and the value of friction force is then unequivocally determined.

2.2 The viscous-elastic model

A mass point *m* has been subjected to an external force *F* and also connected by a serial system of a spring *k*, SV-element α and damping *c* to a fixed ground base.

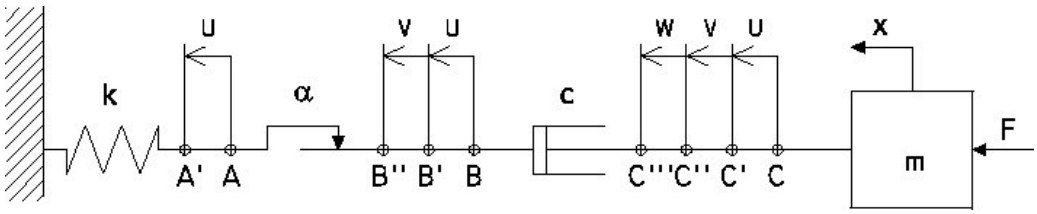

Fig. 2. A scheme of the viscous-elastic model.

In relation to Fig. 2 the following state independent displacement variables are assumed: u – displacement of the end of spring k with regard to the initial position at point A; v – a difference between segments AB and $A'B''$, but w between segment BC and $B''C'''$; x – the final displacement of mass m.

$$x = u + v + w. \tag{6}$$

Additionally, let $\{k, c, \alpha\} \neq 0$ and the function

$$f = c\dot{w} = ku = \alpha\sigma(\dot{v}) \tag{7}$$

in any section of the analyzed coupled system. The equation of motion for the system from Fig. 2 is found

$$m\ddot{x} = -c\dot{w} + F. \tag{8}$$

Using Eq. (7)

$$m\ddot{x} = -ku + F. \tag{9}$$

If the SV-element is taken into the investigations the following inclusion holds

$$ku \in \alpha\sigma(\dot{v}), \tag{10}$$

where $\dot{v}$ reflects in the time differentiation of Eq. (6):

$$\dot{v} = \dot{x} - \dot{u} - \dot{w}. \tag{11}$$

On the basis of Eq. (7), one rewrites

$$\dot{w} = \frac{ku}{c}, \tag{12}$$

so $\dot{v} = \dot{x} - \dot{u} - ku / c$.

Finally,

$$ku \in \alpha\sigma\left(\dot{x} - \dot{u} - \frac{ku}{c}\right). \tag{13}$$

By a quick inspection of Eq. (13) as well as function (5), the following conclusion is drawn: $ku \in [-\alpha; \alpha]$.

Now, a new representation is necessary to introduce. Therefore, let a $\beta(x)$ dependency (see Fig. 3) be defined

$$\beta(x) = \begin{cases} 0 & \text{if } x \in [-\infty; -1] \cup [1; +\infty], \\ \{0\} & \text{if } x \in [-1; 1], \\ \Re^{-} & \text{if } x = -1, \\ \Re^{+} & \text{if } x = 1. \end{cases} \tag{14}$$

Rearrangement of Eq. (13) and substitution of Eq. (14) provides

$$\dot{u} + \beta\left(\frac{ku}{c}\right) \ni \dot{x} - \frac{ku}{c}. \tag{15}$$

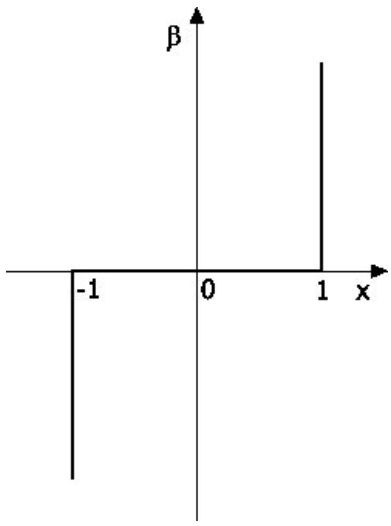

Fig. 3. The discontinuous shape of $\beta(x)$ function.

The pair of Eqs. (9) and (15) with these initial conditions

$$x(0) = x_0, \qquad \dot{x}(0) = \dot{x}_0, \qquad u(0) = u_0 . \tag{16}$$

will describe our mechanical model shown in Fig. 2.

Substituting $\eta = \alpha / k$ and $y = \dot{x}$, the system of Eqs. (9), (15) and initial conditions (16) is equivalent to

$$\dot{x} = y, \qquad \dot{y} = \frac{F - ku}{m}, \qquad \dot{u} + \beta\left(\frac{u}{\eta}\right) \ni \left(y - \frac{ku}{c}\right), \tag{17}$$

with the complementary initial conditions

$$x(0) = x_0, \qquad \dot{x}(0) = \dot{x}_0, \qquad u(0) = u_0 \in [-\eta; \eta] . \tag{18}$$

The case of the full system (17) and (18) is said to be the boundary one if the damping *c* tends to infinity. It does denotes physically a very large viscosity of the damper which is then approximating the ground behaviour. The system in Fig. 2 is reduced to a simpler adequate structural form composed of a spring and the discontinuous SV-element. The model refers therefore to the Prandtl model described by the mathematical representation:

$$\dot{x} = y, \qquad \dot{y} = \frac{F - ku}{m}, \qquad \dot{u} + \beta\left(\frac{u}{\eta}\right) \ni y. \tag{19}$$

3. The 2-dof model

For the aim of a dynamics modelling of buildings there is utilized a system of an undeformable mass connected to a spring of stiffness *k* and a dashpot characterized by

a constant *c*.

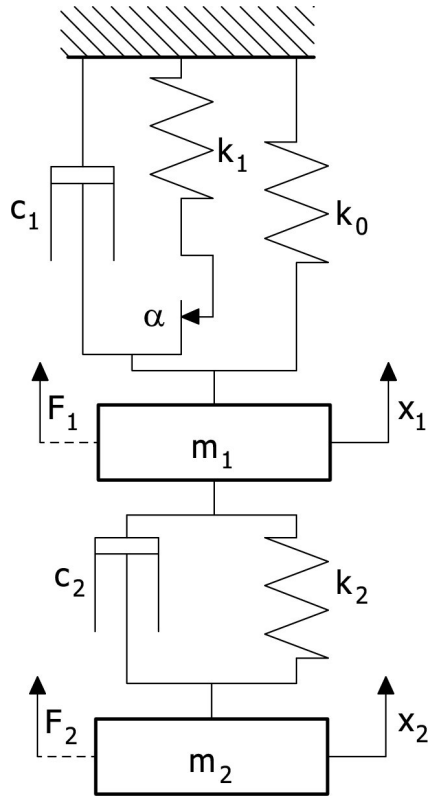

Fig. 4. A schematic view of the building-grund model.

The building with the ground model is shown in Fig. 4 and described by the system of equations

$$\begin{aligned}
&\dot{x}_1 = y_1, \\
&\dot{x}_2 = y_2, \\
&\dot{y}_1 = \frac{1}{m_1}\left[F_1 - k_0 x_1 - k_1 u_1 - c_1 y_1 + k_2(x_2 - x_1) + c_2(y_2 - y_1)\right], \\
&\dot{y}_2 = \frac{1}{m_2}\left[F_2 - k_2(x_2 - x_1) - c_2(y_2 - y_1)\right], \\
&u_1 + \beta\left(\frac{u_1}{\eta_1}\right) \ni y_1,
\end{aligned} \tag{20}$$

and initial conditions:

$$x_i(0) = x_{i,0}, \qquad \dot{x}_i(0) = \dot{x}_{i,0}, \qquad u_1(0) = u_{1,0} \in [-\eta_1; \eta_1]. \tag{21}$$

3.1 Numerical solution – time history of state variables

The system of 2-dof is now under the periodic action of two external forces $f_1 \cos(\omega t)$ and $f_2 \cos(\omega t)$ attached to the first (from the left side) and second mass, respectively.

Time histories and phase diagrams are usually the first graphical representation of system dynamics. Let the system's parameters be assumed: $f_1 = 0.06N$, $f_2 = 0.01N$, $m_1 = m_2 = 1kg$, $k_0 = 2N/m$, $k_1 = k_2 = 1N/m$, $\alpha = 0.02N$, $c_1 = c_2 = 0.05Ns/m$, $\omega = 0.81/s$, and the initial conditions: $x_{1,0} = x_{2,0} = 0$, $y_{1,0} = y_{2,0} = 0$, $u_{1,0} = 0$.

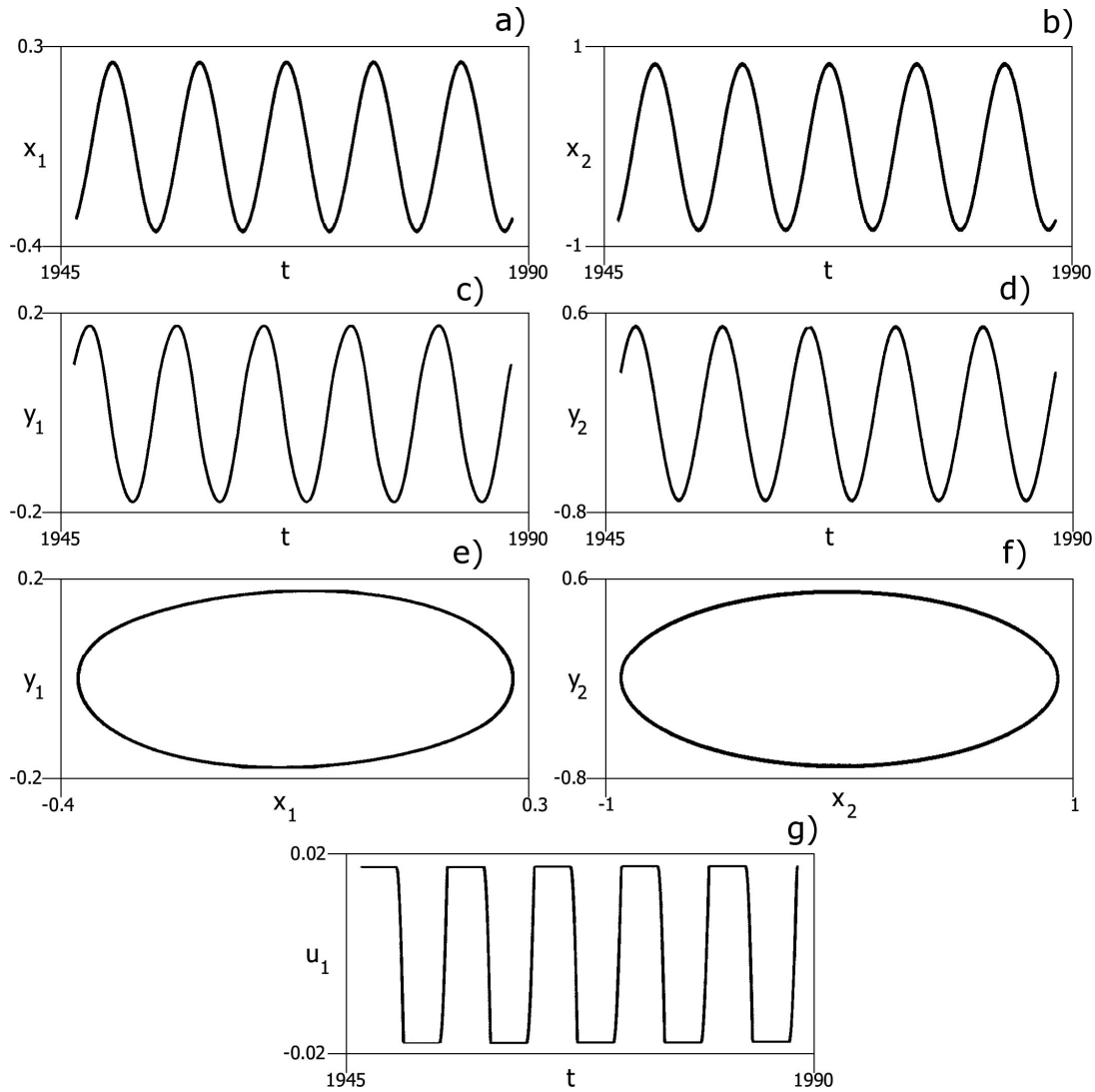

Fig. 5. Time histories of system displacements: a) $x_1(t)$, c) $y_1(t)$ and g) $u_1(t)$, velocities b) $x_2(t)$, d) $y_2(t)$; system phase diagrams of projections: e) $y_1(x_1)$ and f) $y_2(x_2)$.

In the system under investigation there are observed free and excited periodic vibrations with a frequency of excitation ω. Because of existing damping the free vibrations decay during the transitory stage (see Fig. 5), while the time trajectory $x_i(t)$ of the only harmonic vibrations is given in the form

$$x_i(t) = a_i \cos(\omega t + \varphi_i), \tag{22}$$

where a_i is the maximal amplitude, φ_i is the shift phase angle between the excitation

and the system, and ω represents the excitation frequency.

3.2 Numerical solution in the case of amplitude-frequency characteristics

The square norm of the *xi* process is being introduced as follows

$$\|x_1\|^2 = \int_0^{2\pi/\omega} a_i^2 \cos^2(\omega t + \varphi_1)\,dt. \tag{23}$$

Let the solution of Eq. (23) be expected in the form

$$a_i^2 \int_0^{2\pi/\omega} \frac{1+\cos(2(\omega t+\varphi_i))}{2} dt =$$

$$a_i^2 \int_0^{2\pi/\omega} \frac{1}{2} dt + a_i^2 \int_0^{2\pi/\omega} \frac{\cos(2(\omega t+\varphi_i))}{2} dt =$$

$$\left(\frac{a_i^2}{2}\right)\Bigg|_0^{2\pi/\omega} + \left(a_i^2 \frac{\sin(2(\omega t+\varphi_i))}{}\right)\Bigg|_0^{2\pi/\omega} =$$

$$\frac{a_i^2}{2}\left(\frac{2\pi}{\omega} - 0\right) + \frac{a_i^2}{2\omega}\left[\sin\left(2\left(\frac{2\pi}{\omega}\omega + \varphi_i\right)\right) - \sin(2(0\cdot\omega+\varphi_i))\right] =$$

$$a_i^2 \frac{\pi}{\omega} + \frac{a_i^2}{2\omega}[\sin(4\pi + 2\varphi_i) - \sin(2\varphi_i)] =$$

$$a_i^2 \frac{\pi}{\omega} + \frac{a_i^2}{2\omega}[\sin(4\pi)\cos(2\varphi_i) + \cos(4\pi)\sin(2\varphi_i) - \sin(2\varphi_i)] = a_i^2 \frac{\pi}{\omega} = \|x_1\|^2,$$

hence

$$|a_i| = \sqrt{\frac{\omega}{\pi}\int_0^T x_i^2(t)\,dt}. \tag{24}$$

Using the numerically estimated time history $x_i(t)$ of system (20) at each time step it does enables to simply calculate the amplitude of the process. Analogously to the traditionally prepared resonance diagram of 1-dof systems (as a normalized $A / x_{static}(\omega/\alpha)$ dependency, where $x_{static} = f_{static} / k$ is caused by the force being the static loading of the spring *k*), the $|a_i(\omega)|$ characteristics describing the amplitude-frequency dependency of the system's free vibrations (see Fig. 6).

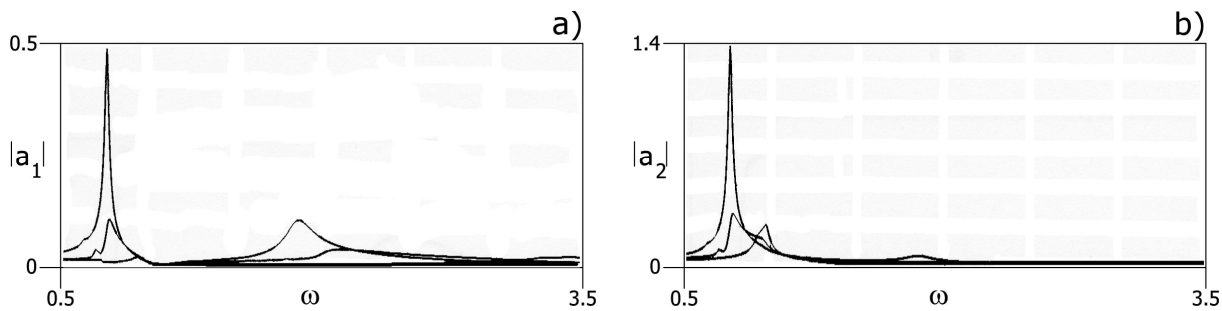

Fig. 6. Aplitude-frequency diagrams for *k*=1, 3, 10: a) $|a_1(\omega)|$, b) $|a_2(\omega)|$.

The graphical representation visible above permits for determination of any free vibrations (regions of a resonance occurrence are placed at the frequency values at which the frequency of excitation ω approaches the frequency of free vibrations – the amplitude of wave is at these points the maximal possible) .

4. The approximate system with friction

For the aim of creation of the adequate, an approximate system to the nonlinear one, we are seeking some equivalent coefficients of damping for each subsystem. These subsystems reduce the starting 2-dof dynamical system to two 1-dof systems.

4.1 Energetic criterion

The source of inner resistance appearing in building constructions is often connected with non-elastic micro deformations of material. In an element of construction or in the whole construction there exist an absorption of a part of mechanical energy which is successively dispersed as a heat. One can estimate the dissipating energy in an experimental way by calculation of surface of the so-called 'spring-hysteresis'. The energy dissipated in one cycle by a force of viscous damping of 1-dof is given by the formula

$$E = 4\int_0^X c\dot{x}dx = 4\int_0^X c\frac{dx}{dt}\frac{dx}{dt}dt = 4\int_0^X c\dot{x}^2 dt, \tag{25}$$

where $c\dot{x}$ is a force acting during a displacement from 0 to X. If $x = X\sin(\omega t)$ during the whole cycle then the energy dissipation is found in the form

$$E = 4\int_0^{\pi/(2\omega)} cX^2\omega^2\cos^2(\omega t)dt = \pi c\omega X^2. \tag{26}$$

In the analogous manner the SV-element's energy dissipation equals $\int \hat{F}dx$, the work done by the friction force $\hat{F}$ that is in any moment of time acting in opposite direction to the ongoing motion, so

$$\pi c_{eq}\omega X^2 = \int \hat{F}dx, \tag{27}$$

The equivalent coefficient of damping (c_{eq}) of the SV-element is then as follows

$$c_{eq} = \frac{\int \hat{F}dx}{\pi\omega X^2}. \tag{28}$$

Each SV-element of the two subsystems will posses the following representation of equivalent damping coefficients

$$c_{eq,i} = \frac{\int (F_i(t) - m_i \ddot{x}_i) dx}{\pi \omega x_i^2}, \qquad i = 1, 2. \tag{29}$$

4.2 Normal modes of vibrations

Let us inspect normal modes of vibrations of the 2-dof linear system shown in Fig. 7.

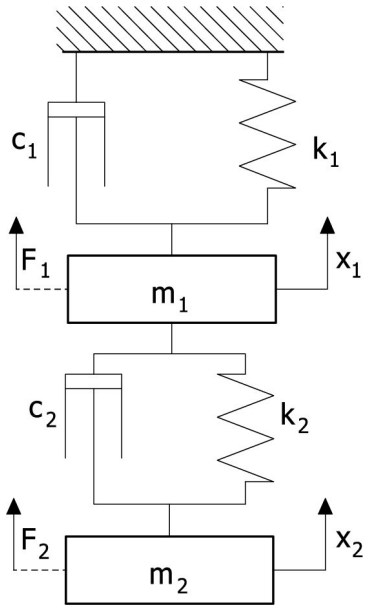

Fig. 7. The investigated 2-dof system.

Matrix form of the analyzed system's equations are given

$$M\ddot{X} + C\dot{X} + KX = F, \tag{30}$$

where: $X-$ the vector of displacement; M, C, $K-$ mass, damping and stiffness matrices, respectively; $F-$ the vector of external forces.

Assumption that C=0 and F=0 yields

$$M\ddot{X} + KX = 0. \tag{31}$$

In relation to 1-dof system, let a solution of (31) be given in the form of harmonic function of frequency α:

$$X = \tilde{X} \sin \alpha t, \tag{32}$$

where $\tilde{X}$ is the vector of free vibrations' amplitudes representing the displacement of the system mass elements in a direction of generalized coordinates, Putting the above in (31) and assuming that the new solution has to be met in each moment of time, the following system of linear ordinary algebraic equations holds

$$\left(-\alpha^2 M + K\right)\tilde{X} = 0, \tag{33}$$

and is solvable if $\det\left(-\alpha^2 M + K\right) = 0$. Expansion of the determinant provides the n-th

degree polynomial with regard to α^2, afterward the roots α_1, α_2 are found. Each frequency α_i correspond to the solution $\tilde{X} = \hat{X}_i$, therefore

$$\left(-\alpha_i^2 M + K\right)\hat{X}_i = 0, \tag{34}$$

where $\hat{X}_i$ is the *i*-th eigenvector or the *i*-th mode of normal vibrations. There exist two eigenvectors in our case. Let *P* be defined as a set of solutions $\hat{X}_i$:

$$P = [\hat{X}_1; \hat{X}_2], \qquad and \quad X = P[q_1; q_2]^T. \tag{35}$$

Substituting *X* in (30) and multiplying it by P^{-1}, we get

$$P^{-1}MP\ddot{q} + P^{-1}CP\dot{q} + P^{-1}KPq = P^{-1}F(t). \tag{36}$$

One assumes that

$$P^{-1}CP = \tilde{C}_{eq}, \tag{37}$$

where $\tilde{C}_{eq} = \begin{bmatrix} \tilde{c}_{eq,1} & 0 \\ 0 & \tilde{c}_{eq,1} \end{bmatrix}$. Values $\tilde{c}_{eq,1}$ and $\tilde{c}_{eq,2}$ are the equivalent coefficients of damping for the first and second subsystem, respectively. The 2-dof system is then described by

$$\begin{aligned} \ddot{q}_1 + \tilde{c}_{eq,1}\dot{q}_1 + \omega_1^2 q_1 &= \tilde{F}_1(t), \\ \ddot{q}_2 + \tilde{c}_{eq,2}\dot{q}_2 + \omega_2^2 q_2 &= \tilde{F}_2(t), \end{aligned} \tag{38}$$

where $\tilde{c}_{eq,i} = \dfrac{\int \mu_i dq_i}{\pi\omega q_i^2}$, and $\mu_i = (\tilde{F}_i(t) - \ddot{q}_i)$.

To put into the analysis the effect of dry friction, μ_i takes the shape

$$\begin{aligned} \mu_1 &= p_{11}^{-1}\left(F_1(t) - m_1\ddot{x}_1(t)\right) + p_{12}^{-1}\left(F_2(t) - m_2\ddot{x}_2(t)\right), \\ \mu_2 &= p_{21}^{-1}\left(F_1(t) - m_1\ddot{x}_1(t)\right) + p_{22}^{-1}\left(F_2(t) - m_2\ddot{x}_2(t)\right), \end{aligned} \tag{39}$$

and q_i (for *i*=1,2)

$$\begin{aligned} q_1 &= p_{11}^{-1}x_1(t) + p_{12}^{-1}x_2(t), \\ q_2 &= p_{21}^{-1}x_1(t) + p_{22}^{-1}x_2(t). \end{aligned} \tag{40}$$

If μ_i and q_i are known, $\tilde{C}_{eq}$ matrix can be defined. Having it found let us do first the right-hand side multiplication of Eq. (37) by P^{-1} and then the left-hand side multiplication of the same equation by *P*, one finds

$$PP^{-1}CPP^{-1} = P\tilde{C}_{eq}P^{-1}. \tag{41}$$

Simplification of Eq. (41) produces the definition of a matrix *C* of the form:

$$C = \tilde{C} = P\tilde{C}_{eq}P^{-1} = \begin{bmatrix} \tilde{c}_{11} & \tilde{c}_{12} \\ \tilde{c}_{21} & \tilde{c}_{22} \end{bmatrix}, \qquad \tilde{c}_{12} = \tilde{c}_{21}. \tag{42}$$

Finally, the matrix representation of equations of motion of the vicarious system takes the form:

$$M\ddot{X} + \tilde{C}\dot{X} + KX = F, \tag{43}$$

4.3 Numerical results and comparisons

The aim of this subsection is to make a behavioral comparisons of the exact (with SV-elemnt) and the approximate (with viscous damping) systems of 2-dof (see Fig. 8). System parameters are as follows: $f_1 = 6N$, $f_2 = 0.01N$, $m_1 = m_2 = 1kg$, $k_0 = 2N/m$, $k_1 = k_2 = 1N/m$, $\alpha = 0.04N$, $c_1 = 0.025Ns/m$, $c_2 = 0.25Ns/m$, and the initial conditions: $x_{1,0} = x_{2,0} = y_{1,0} = y_{2,0} = 0$, $u_{1,0} = 0$.

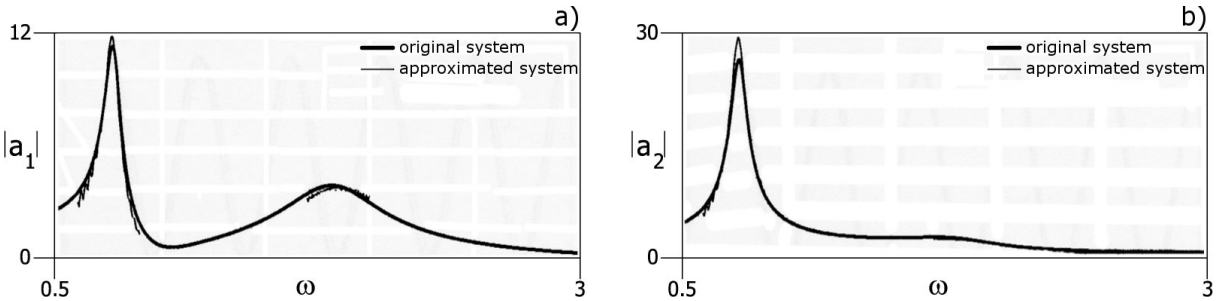

Fig. 8. Aplitude-frequency diagrams for the original system and its approximated adequate: a) $|a_1(\omega)|$, b) $|a_2(\omega)|$.

This conducted above second part of our numerical analysis confirms a stiff dependence of damping coefficients also (next to the dependence on the frequency of external excitation) on f_1 and f_2, the amplitudes of forces F_1 and F_2. The comparison visible in Fig. 8 confirms an acceptable covering of the $|a_i(\omega)|$ curves.

5. Control of the 2-dof system being under a stochastic type of excitation

Current knowledge about this particular case of dynamical systems analysis allows us to describe this kind of for example seismic excitation by the filtrated white noise [2,3,8].

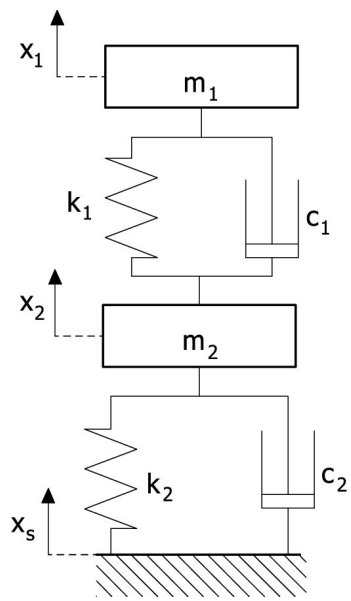

Fig. 9 A schemed view of the 2-dof system stochastically loaded.

Stochastic loading is attached to the ground and is estimated by means of a linear filtering of white noise (see Fig. 9). The used irregular time-dependent displacement x_s is cast in the following form

$$x_s(t) = G_s(t) z_a(t), \tag{44}$$

where z_a is the n-dimensional vector representing the state of seismic excitation model:

$$\ddot{z}_a(t) = 2\xi_d \omega_d \dot{z}_a(t) + \omega_d^2 z_a(t) = \varpi(t). \tag{45}$$

Parameters ω_d and ξ_d represents any local ground conditions. Equation (45) posseses also a first orderdifferential equation form as below

$$\dot{z}_a(t) = A_z z_a(t) + B_z \varpi(t), \tag{46}$$

where matrices A_z and B_z are equal

$$A_z = \begin{bmatrix} 0 & 1 \\ -\omega_d^2 & -2\xi_d \omega_d \end{bmatrix}, \qquad B_z = \begin{bmatrix} 0 \\ 1 \end{bmatrix}, \tag{47}$$

and ϖ denotes a stationary white noise defined as a boundary of Ornstein-Uhlenbeck, $G_s(t)$ is the envelope of z_a and is defined by

$$G_s(t) = \begin{cases} 0 & t < 0, \\ \left(\dfrac{t}{t_1}\right)^2 & 0 \le t \le t_1, \\ 1 & t_1 \le t \le t_2, \\ e^{-c(t-t_2)} & t > t_2, \end{cases} \tag{48}$$

where c is a constant value, and t_1 and t_2 are the initial and final time of the excitation action, respectively.

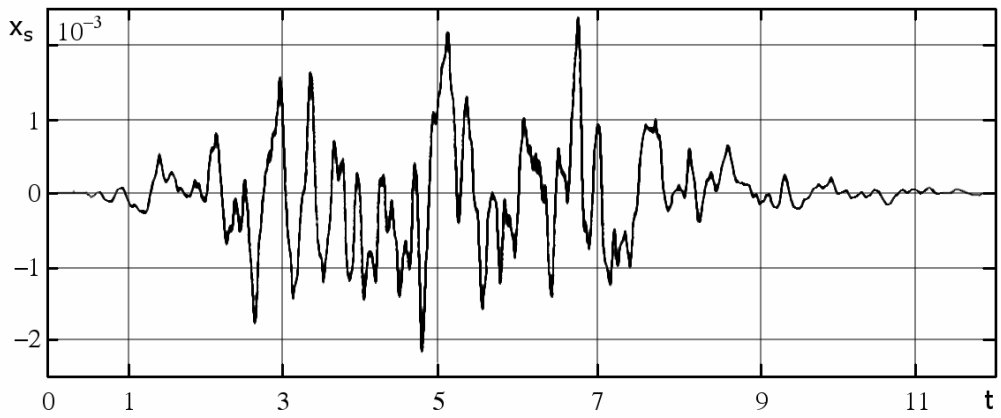

Fig. 2 Time history of the noisy ground displacement for $\omega_d = 18.87 rad/s$, $\xi_d = 0.65$, $t_1 = 3s$, $t_2 = 10s$, and $c = 0.76 s^{-1}$.

General form of the system under any external loading takes the form

$$\dot{x}(t) = A(t)x(t) + B(t)u(t) + D(t)z(t), \tag{49}$$

where: A – ($n \times n$) matrix of structure parameters, B – ($n \times n$) matrix of executing (regulatory) elements, x – the n-dimensional state vector of the system.this new matrix, $D(t)$ indicates a point of application of the external loading. Equations (46) and (49) create a system describing the investigated and simplified to 2-dof building construction.

$$\begin{bmatrix} \dot{x}(t) \\ z_a(t) \end{bmatrix} = \begin{bmatrix} A & DG_s(t) \\ 0 & A_z \end{bmatrix} \begin{bmatrix} x(t) \\ z_a(t) \end{bmatrix} + \begin{bmatrix} B \\ 0 \end{bmatrix} u(t) + \begin{bmatrix} 0 \\ B_z \end{bmatrix} \varpi(t), \tag{50}$$

Knowledge of x_s and its derivative permits to give the following system of equations

$$\begin{aligned} m_1 \ddot{x}_1(t) &= -u(t) + k_1\left(x_s(t) - x_1(t)\right) + c_1\left(\dot{x}_s(t) - \dot{x}_1(t)\right), \\ m_2 \ddot{x}_2(t) &= u(t). \end{aligned} \tag{51}$$

Control law $u(t)$ (introduced in [1]) can be proposed in the form

$$u(t) = -R^{-1}B^T[K_x x(t) + K_z G_s(t) z_a(t)], \tag{52}$$

where the Riccati and Lyapunov solution matrices need to be numerically computed from:

$$\begin{aligned} &K_x A + A^T K_x + Q - K_x B R^{-1} B^T K_x = -\dot{K}_x(t), \\ &K_x(t_f) = \theta(t_f), \\ &K_x D + K_z A_z + A^T K_z + S - K_x B R^{-1} B^T K_z = -\dot{K}_z(t), \\ &K_z(t_f) = 0. \end{aligned} \tag{53}$$

The remaining functions and matrices are as follows

$$A=\begin{bmatrix} 0 & 0 & 1 & 0 \\ 0 & 0 & 0 & 1 \\ -k_1 m_1 & 0 & -c_1 m_1 & 0 \\ 0 & 0 & 0 & 0 \end{bmatrix}, \qquad B=\begin{bmatrix} 0 \\ 0 \\ -1/m_1 \\ 1/m_2 \end{bmatrix}, \qquad Q=\begin{bmatrix} q_1+q_2 & -q_2 & 0 & 0 \\ -q_2 & q_2 & 0 & 0 \\ 0 & 0 & 0 & 0 \\ 0 & 0 & 0 & 0 \end{bmatrix},$$

$$D=\begin{bmatrix} 0 & 0 \\ 0 & 0 \\ k_1/m_1 & c_1/m_1 \\ 0 & 0 \end{bmatrix}, \; S^T=\begin{bmatrix} -q_1 & 0 & 0 & 0 \\ 0 & 0 & 0 & 0 \end{bmatrix}, \; A_z=\begin{bmatrix} 0 & 1 \\ z_1 & z_2 \end{bmatrix}, \; \theta=0, \; R=r,$$

where q_1, q_2 and r are some weighting coefficients, t_f - final step of integration.

Let us solve our problem taking such a set of parameters: $m_1=0.15\cdot 10^4 kg$, $m_2=1.1\cdot 10^4 kg$, $k_1=9.75\cdot 10^5 N/m$, $k_2=5.3\cdot 10^4 N/m$, $c_1=1.08\cdot 10^4 Ns/m$, $c_2=1.5\cdot 10^4 Ns/m$, $z_1=-\omega_d^2$, $z_2=-2\xi_d\omega_d$, $q_1=10$, $q_2=1$, $r=2\cdot 10^{-10}$.

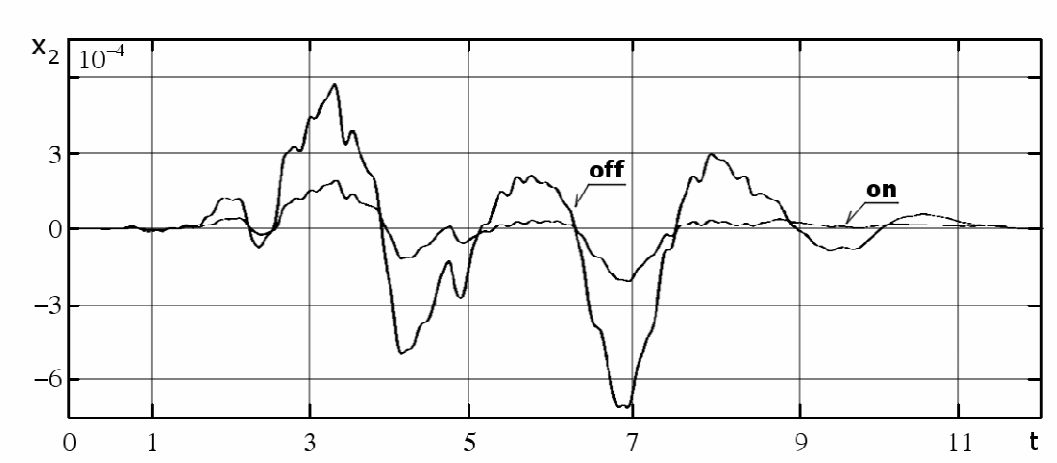

Fig. 3 Time history of the passive ('off') and active ('on') system control.

Figure 3 shows that for some properly chosen weighting coefficients the displacement of the top mass m_2 being influenced by the active control, is significantly better damped.

6. Conclusions

Some numerical experiments devoted to analysis and control of a two-mass spring system are provided in this article. First main part of the work concerning solution and some basic energetic investigations on the 2-dof dynamical system has shown, the transformation of the analysed system to the approximated adequate is acceptable and can be verified also during application of a control scheme. The presented approach can be used to model a more advanced single building-ground interaction that has been externally excited by an irregular force . Irregularities of that type are introduced in the

theory of earthquakes in a variety of forms. For an experimental curiosity the purpose of this work was focused on application of them as the stochastically unexpected loading.

Acknowledgements

The work has been supported by the Ministry of Science and Education (grant No. 4T07A 03128).

References

[1] Awrejcewicz J, Olejnik P: Active control of two degrees-of-freedom building-ground system, Archives of Control Sciences 17(4), 2007, 393-408.

[2] Beards Ch.F. Engineering vibration analysis with application to control systems. Edward Arnold, London, 1996.

[3] Chmielowski T. Probabilistic methods in dynamics of constructions. WSI, Opole, 1982.

[4] Clough RW, Penzien J: Dynamics of Structures. New York, McGraw-Hill, 1975.

[5] Copra AK: Dynamics of Structures: Theory and Applications to Earthquake Engineering. Prentice Hall, New York 2000.

[6] Inman DJ: Vibrations: With Control, Measurement Stability. Prentice Hall, New Jersey 1989.

[7] Kanai W: Semi-empirical formula for the seismic characteristics of the ground. 1957 Bull. of Earth. Res. Inst. 35, 309-325.

[8] Lin K.Y. and Yong Y. Evolutionary Kanai-Tajimi earthquake models. Journal of Engineering Mechanics Division ASCE, 113(8), 1987, 1119-1137.

[9] Monteiro Marques MDP: An existence, uniqueness and regularity study of the dynamics of system with one-dimensional friction. 1994 European J. of Mechanics *A* Solids 13(2), 277-306.

[10] Newmark NM, Rosenblueth E: Fundamentals of Earthquake Engineering. Prentice Hall, New York 1975.

[11] Rofooei FR, Mobarake A, Ahmadi G: Kanai-Tajimi model. 2001 Engineering Structures 23, 827-837.

[12] Ruiz P, Penzien J: Probabilistic study of the behaviour of structures during earthquakes. Earth Eng. Res. Center, Univ. of California, Berkely, Report No EERC 6903, 1969.

[13] Wolf JP: Foundation Vibration Analysis Using Simple Physical Models. Prentice Hall, Englewood Cliffs, New Jersey 1994.

Authors:
Prof. Jan Awrejcewicz
Dr Pawel Olejnik
Technical University of Lodz, Department of Automatics and Biomechanics, 1/15 Stefanowski Str.
90-924 Lodz, Poland
Phone/ Fax: (+4842) 6312225
E-mail: awrejcew@p.lodz.pl, olejnikp@p.lodz.pl